# APPROXIMATE FOLDER DIMENSIONS

REQ# G38-003189
SNAP# 1427111
ITB # 2212953

LINE#: 00002

NOMINAL DIM.: 48 L x 48 W

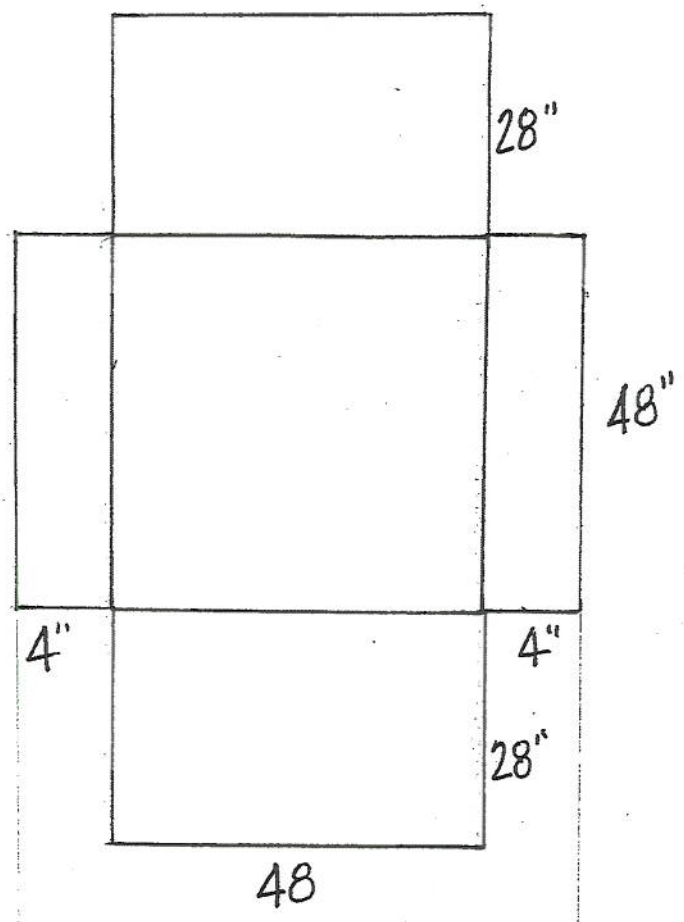


LINE#: 00001

NOM. DIM. 30 L x 24 W

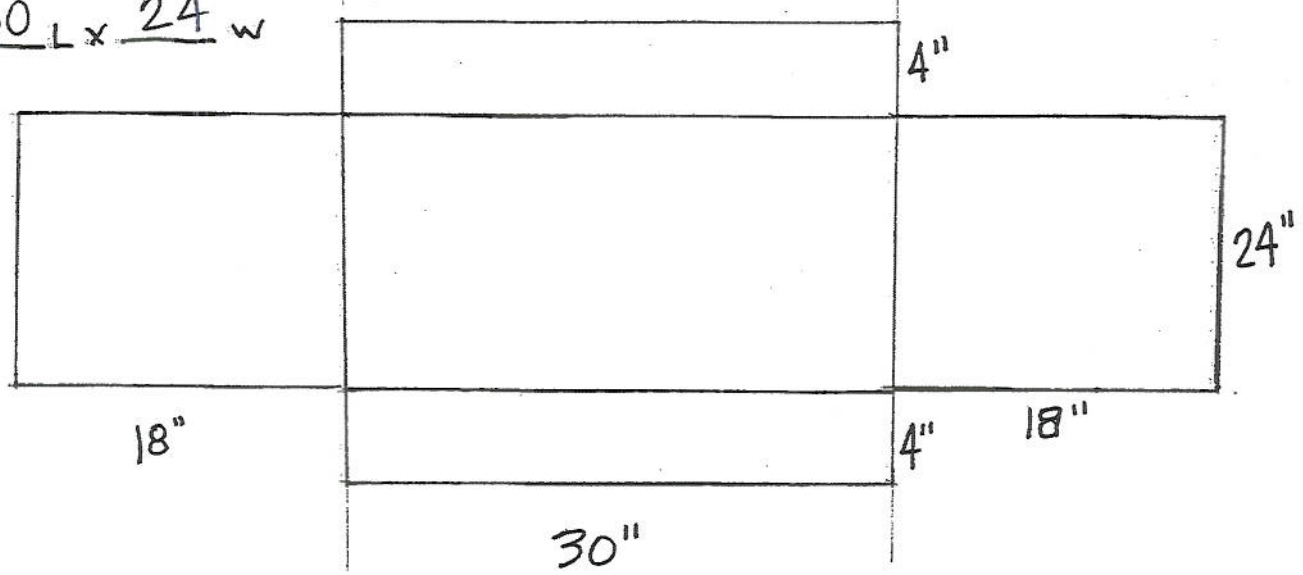

# APPROXIMATE FOLDER DIMENSIONS

REQ# G38-003189
SNAP# 1427111
ITB # 2212953

LINE#: 00008

NOMINAL DIM.: 36" L x 36" W

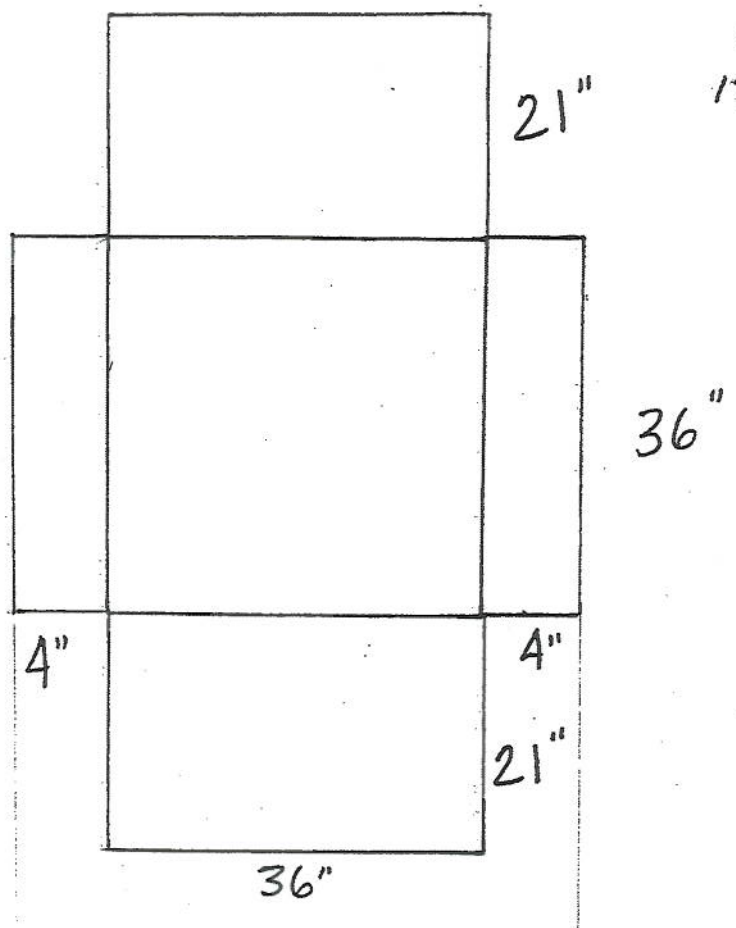


LINE#: 00003

NOM. DIM. 24 L x 12 W

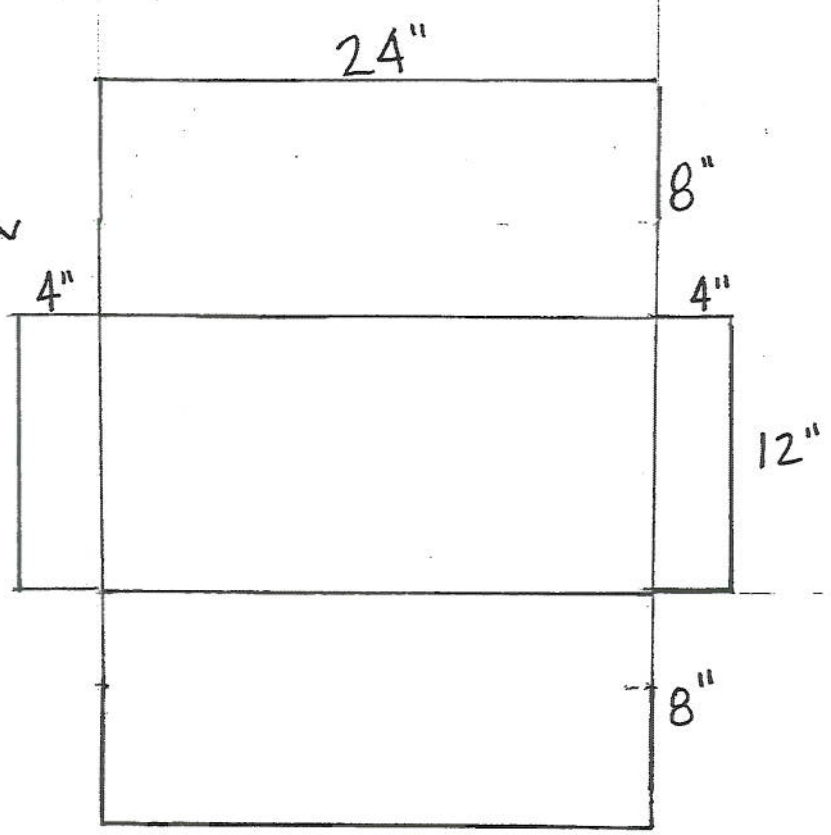

# APPROXIMATE FOLDER DIMENSIONS

REQ# G38-003189
SNAP# 1427111
ITB # 2212953

LINE#: _____

NOMINAL DIM.: ____ L x ____ W

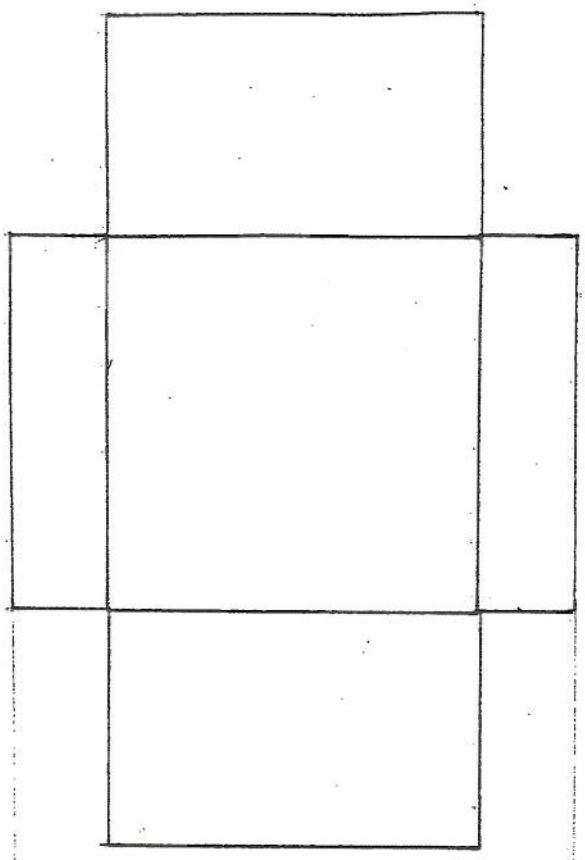

LINE#: 00004

NOM. DIM. 36 L x 12 W

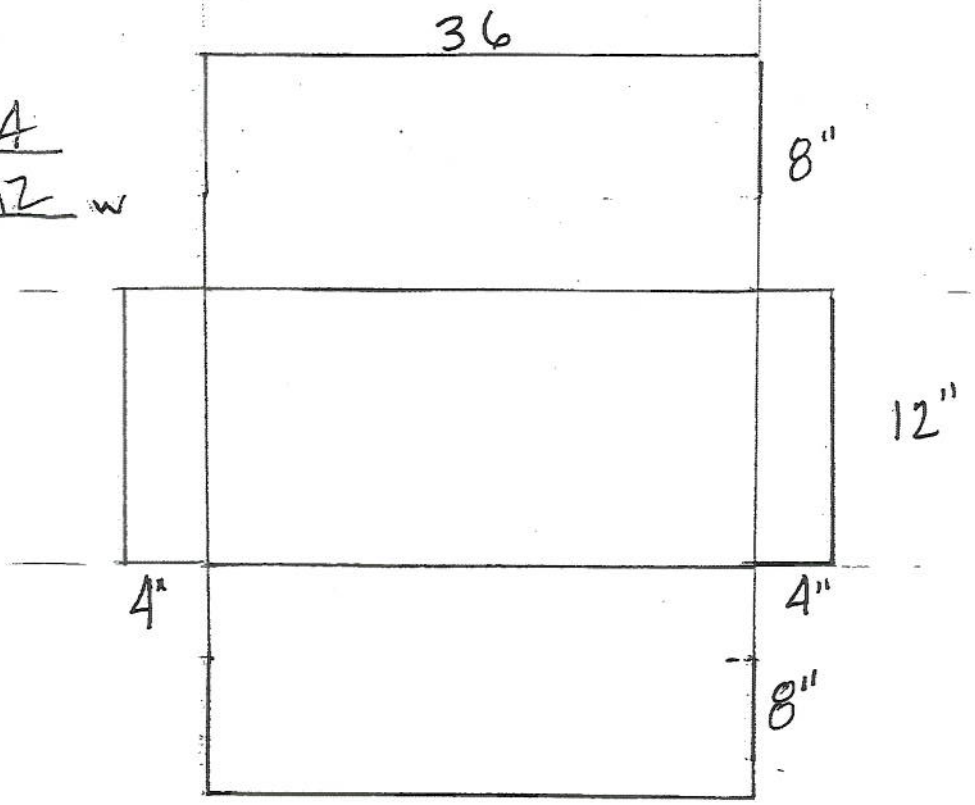

# APPROXIMATE FOLDER DIMENSIONS

REQ# G38-003189
SNAP# 1427111
ITB # 2212953

LINE#: 00006

NOMINAL DIM: 24"L x 24"W

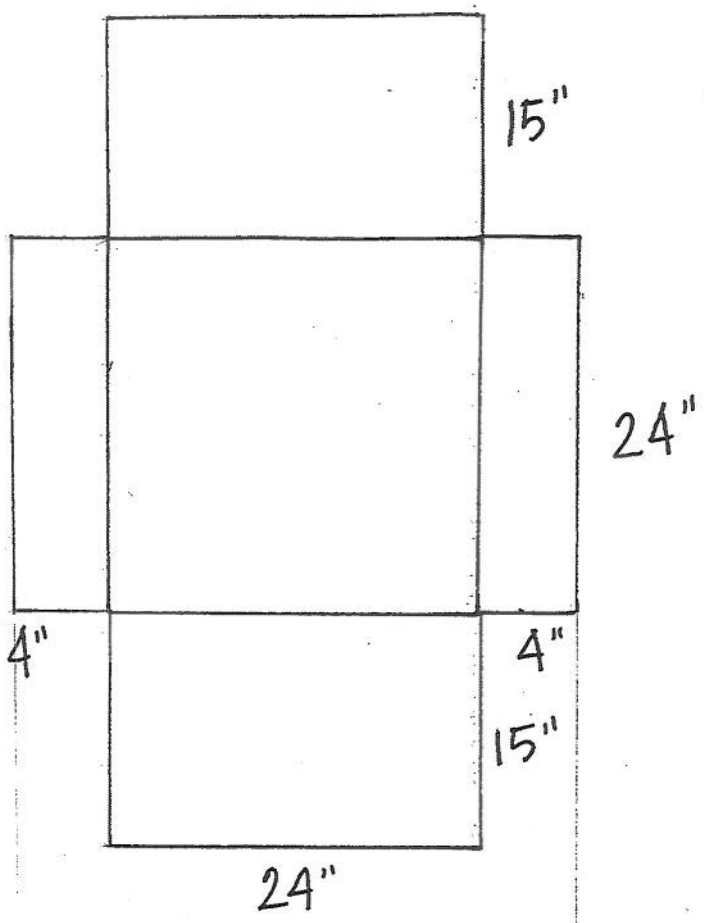


LINE#: 00005

NOM. DIM. 21 L x 15 W

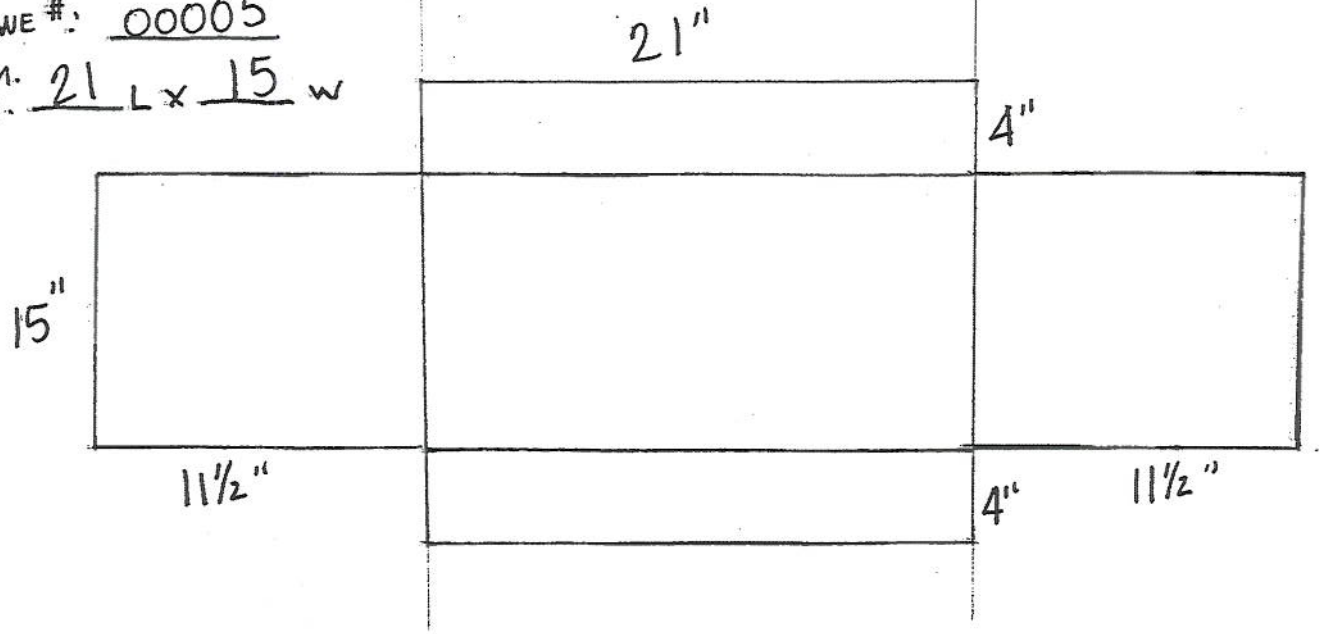

# APPROXIMATE FOLDER DIMENSIONS

REQ# G38-003189
SNAP# 1427111
ITB # 2212953

LINE#: _____

NOMINAL DIM.: ____ L x ____ W

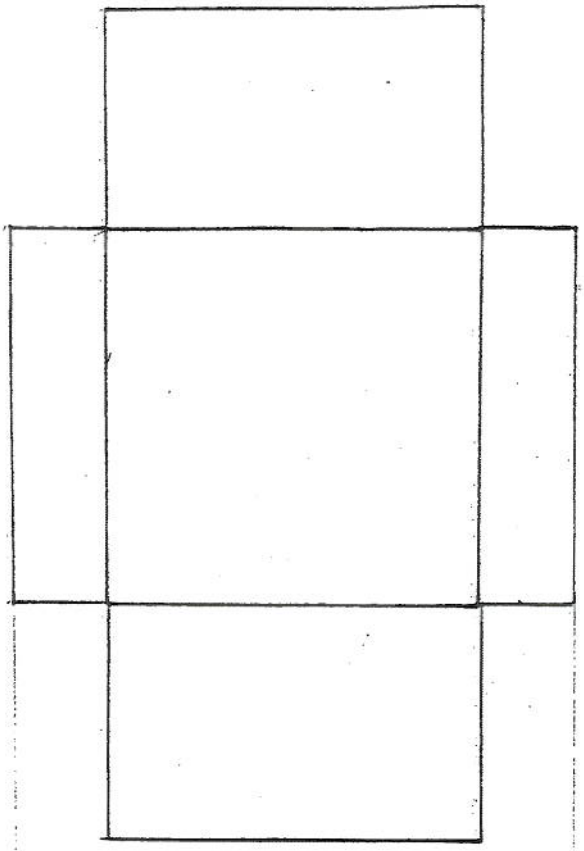
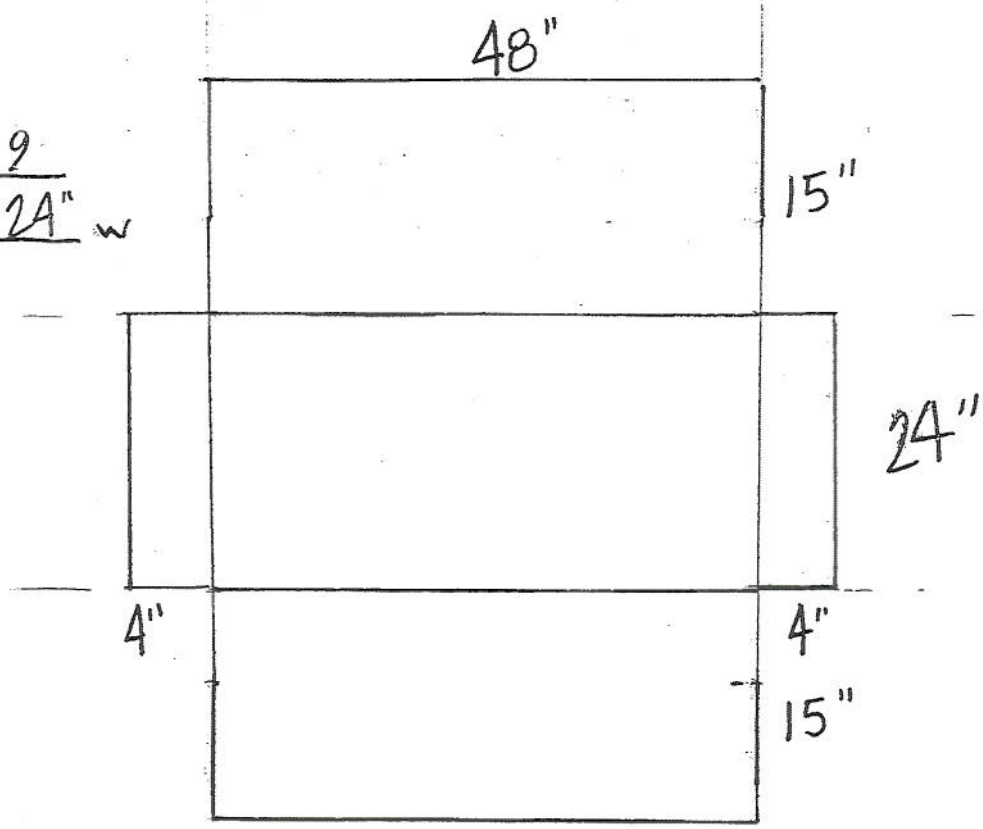
LINE#: 00009
NOM. DIM. 48" L x 24" W