ITB: 2219225

Addendum:

1. Change length on widen both sides of entrance to approximately 350'
   See Drawing 1

2. Add Truck Turnaround Area, 25'x35', Approximately 875 Sq Ft
   See Drawing 2

3. Add Dumpster Approach Area, Approximately 220 Sq Ft
   See Drawing 3

Dept of Youth Services
Entrance
Areas to be Widened 6'

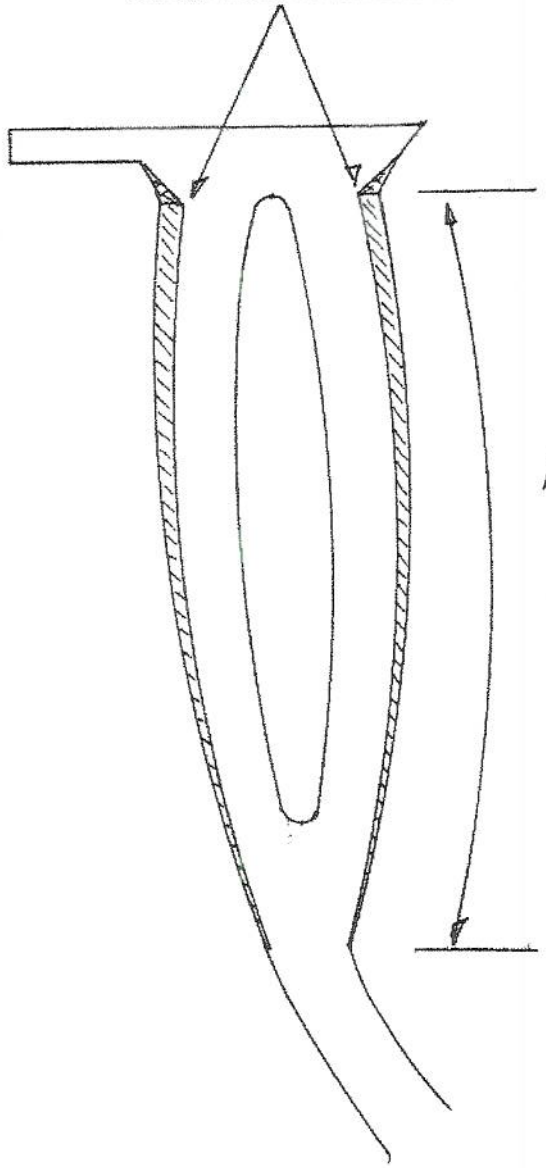

Approximately
350'

This would add
Approximately 52 SY
or 468 sf

"Drawing Not to Scale"

N

Truck Turnaround Area

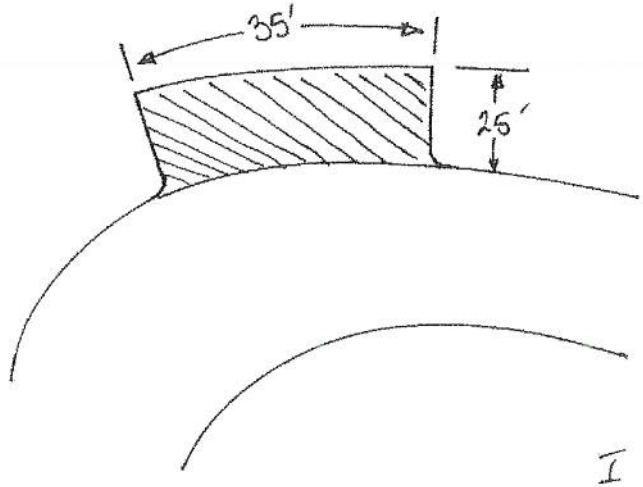

This would add Approximately 98 SY or 875 sf

I would recommend the same buildup in this area as that to be used on the widening in the entrance.

"Drawing Not to Scale"

7

Dumpster Approach Area

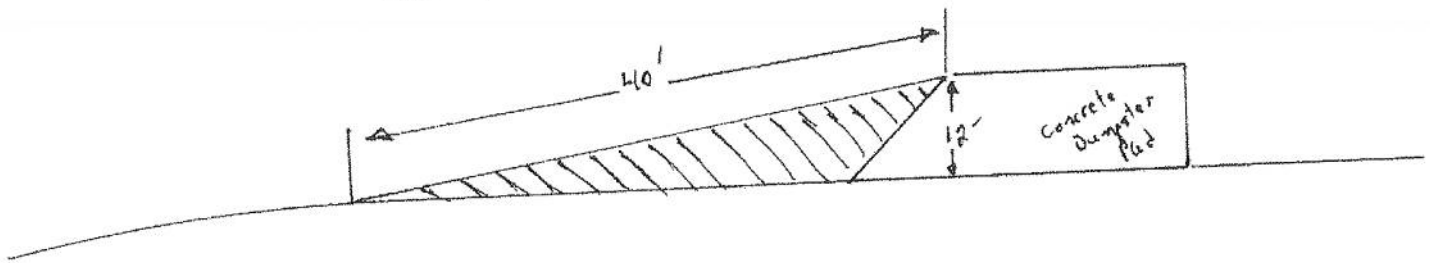

This would add
Approximately 27 SY
or 240 sf

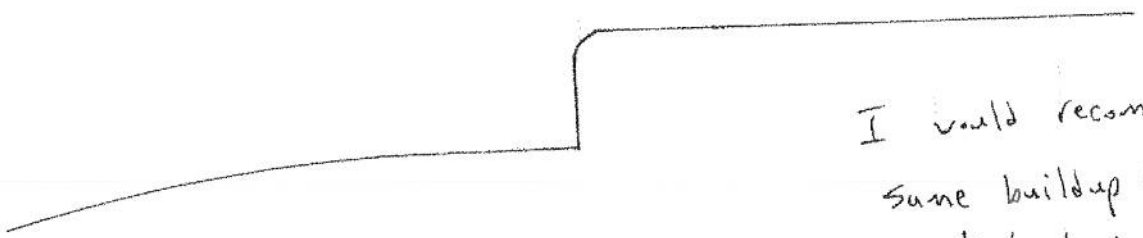

I would recommend the same buildup in this area as that to be used on the widening in the entrance.

"Drawing Not to Scale"